FM APPROVED

SYSTEEM VOOR ONDERGRONDSE BRANDBESTRIJDINGSSYSTEMEN - FM
SYSTEME POUR DISPOSITIFS DE LUTTE CONTRE LES INCENDIES SOUTERRAINS
SYSTEM FOR UNDERGROUND FIRE FIGHTING SYSTEMS - FM

Heel wat industriële en automobielgroepen wensen of eisen een FM-certificering voor toegepaste infrastructuurproducten in hun fabrieken.
AGRU heeft aan deze vereisten voldaan en beschikt nu over een certificering voor PE 100 stomplas- en elektrofittingen en buizen overeenkomstig FM-klasse nummer 1613 “Polyethyleen (PE) buizen en fittingen voor ondergrondse brandbestrijding”.
Deze kwaliteit moet worden verzekerd via een jaarlijkse FM-audit door derden.
De buizen en fittingen zijn gecertificeerd voor een maximale werkdruk van 15 bar/218 psi of 17.5 bar/250 psi bij een temperatuur van 20 °C/68 °F in overeenstemming met FM-klasse nummer 1613.

Beaucoup de groupes industriels et automobiles souhaitent ou exigent la certification FM pour les installations de leurs usines.
AGRU a répondu à ces exigences et possède désormais les certificats de conformité pour les soudages bout-à-bout en PE 100, les tuyaux et raccords électro-soudables conformes à la catégorie FM n°1613, et les tuyaux et raccords en polyéthylène de protection contre les incendies souterrains en polyéthylène (PE).
FM Global assurera annuellement la qualité des produits via des audits effectués par des tiers.
Les tuyaux et raccords sont certifiés pour supporter une pression maximale de 15 bars/218 psi ou 17.5 bars/250 psi sous une température de 20°C, conformément à la catégorie FM n°1613.

Many industrial and automobile groups wish or demand to have an FM approval for applied infrastructure products in their factories.
AGRU had fulfilled these demands and has now an approval for PE 100 heating element butt welding-, electro fusion fittings and pipes according FM Class Number 1613 “Polyethylene (PE) Pipe and Fittings for Underground Fire Protection”.
This quality will be secured through an annual third party audit of FM.
The pipes and fittings are approved for a maximum operating pressure of 15 bar/218 psi or 17.5 bar/250 psi at 20°C/68°F according to FM Class Number 1613

Tabel : maximale druk van goedgekeurde buizen en fittingen.
Tableau : maximale de pression approuvé de tubes et raccords.
Table : maximum operating pressure of approved pipes and fittings.

		15 bar/ 218 PSI		17.5 bar/ 250 PSI	
°C	**Jaren Ans years**	**Ontwerp druk Design pressure**	**Druk Pressure**	**Ontwerp druk Design pressure**	**Druk Pressure**
10	**50**	19.00	15.0	23.9	17.5
20	**50**	16.00	15.0	20.0	17.5
23	**50**	15.10	15.0	19.1	17.5
30	**50**	13.50	13.5	17.0	17.0
38	**50**	12.00	12.0	14.5	14.6
40	**50**	11.60	11.6	13.8	13.8
50	**15**	9.40	9.4	11.9	11.9
60	**5**	7.70	7.7	9.7	9.7

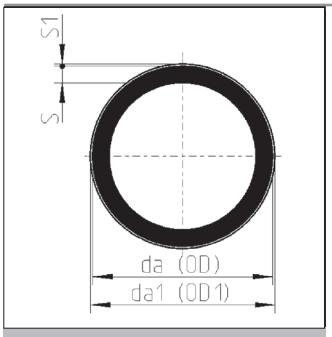

218 psi

DRUKBUIS - RECHTE LENGTEN - ZWART
TUYAUX DE PRESSION - LONGUEURS DROITES - NOIR
PRESSURE PIPE - STRAIGHT LENGTHS - BLACK

L = 12 m
Volgens FM1613.

SDR 11 / ISO S-5

da	s	KG/M
63	5.8	1.06
75	6.8	1.48
90	8.2	2.14
110	10.0	3.18
125	11.4	4.12
140	12.7	5.13
160	14.6	6.74
180	16.4	8.51
200	18.2	10.5
225	20.5	13.3
250	22.7	16.3
280	25.4	20.5
315	28.6	25.9
355	32.2	32.9
400	36.3	41.7
450	40.9	52.8
500	45.4	65.2
560	50.8	81.7
630	57.2	103.0

Prijs op aanvraag / prix sur demande / prices on request

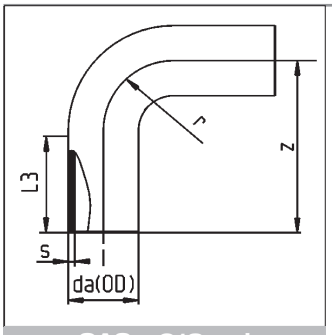

SAS - 218 psi

MULTI-BOCHTEN 90°
MULTI-COURBES A 90°
MULTI-BENDS 90°

Gespoten
Injectés
Moulded.

SDR 11 / ISO S-5

da	L3	r	z	s	KG/ST/PC	€/ST/PC
63	66.5	63	129.5	5,8	0,263	**7.62**
75	75.0	75	150.0	6,8	0,413	**10.50**
90	76.0	90	168.0	8,2	0,685	**15.22**
110	82.0	110	189.0	10,0	1.144	**28.97**
125	92.0	125	218.0	11,4	1,681	**40.80**
140	95.0	140	241.0	12,7	2.380	**54.56**
160	100.5	160	260.0	14,6	3.320	**70.24**
180	109.0	180	285.0	16,4	4.580	**83.21**
200	118.5	200	318.5	18,2	6.180	**123.97**
225	125.0	225	353.0	20,5	8.520	**147.91**

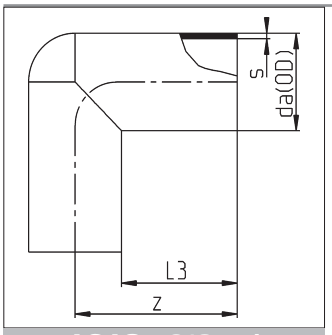

AGAS - 218 psi

KNIEEN 90°
COUDES A 90°
ELBOWS 90°

Met verlengde benen, gespoten.
Ook geschikt voor electromoflas.

Coudes injectés, à branches allongées.
Conviennent aussi pour l'electro-soudage dans l'emboîture.

Elongated, moulded.
Also suitable for electro socket welding.

SDR 11 / ISO S-5

da	L3	z	s	KG/ST/PC	€/ST/PC
250	175	304	22.7	9.44	
280	197	340	25.4	12.86	
315	205	370	28.6	18.10	

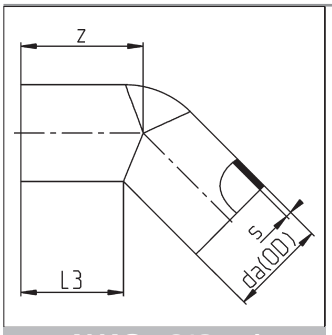

AHAS - 218 psi

KNIEEN 45°
COUDES A 45°
ELBOWS 45°

Met verlengde benen, gespoten.
Ook geschikt voor electromoflas.

Coudes injectés, à branches allongées.
Conviennent aussi pour l'electro-soudage dans l'emboîture.

Elongated, moulded.
Also suitable for electro socket welding.

SDR 11 / ISO S-5

da	L3	z	s	KG/ST/PC	€/ST/PC
63	65.5	80.0	5,8	0,172	**14.37**
75	70.0	90.0	6,8	0,274	**17.86**
90	82.0	104.0	8,2	0,440	**22.38**
110	82.0	108.0	10,0	0,679	**42.89**
125	99,5	126.0	11,4	1,060	**53.00**
140	100.0	135.0	12,7	1,400	**69.34**
160	116,5	150.0	14,6	2,060	**80.13**
180	131,5	176,5	16,4	2,860	**87.72**
200	122.0	167.0	18,2	3,580	**119.86**
225	125,5	173,5	20,5	4,760	**142.88**
250	158.0	217.0	22,7	7.160	**276.72**
280	168.0	238.0	25,4	9,620	**417.85**
315	176.0	248.0	28,6	12,900	**522.80**

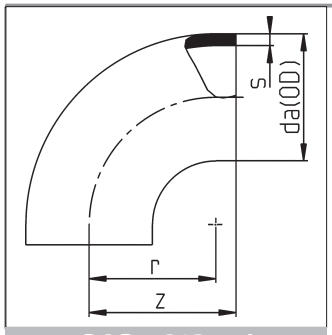

GAS - 218 psi

BOCHTEN 90°
COURBES A 90°
BENDS 90°

Gespoten - kort.
Injectés - court.
Moulded - short.

SDR 11 / ISO S-5

da	r	z	s	KG/ST/PC	€/ST/PC
63	63	70	5.8	0.12	**7.62**
75	75	85	6.6	0.21	**10.50**
90	90	100	8.2	0.37	**15.22**
110	110	124	10.0	0.66	**28.97**
125	125	140	11.4	0.93	**40.80**
140	140	150	12.7	1.28	**54.56**
160	155	180	14.6	2.10	**70.24**
180	180	200	16.4	2.82	**83.21**
200	200	220	18.2	4.02	**123.97**
225	225	243	20.5	5.24	**147.91**
250	265	290	22,7	8.02	**266.69**
280	265	290	25,4	9.75	**385.56**
315	300	340	28,6	14.36	**478.66**
355	300	340	32,2	18,46	**700.15**
400	300	345	36,3	23.50	**961.48**
450	400	445	40,9	38.80	**1261.65**
500	400	445	45,4	48.34	**1627.54**

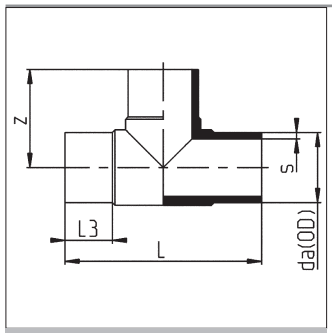

ATAS - 218 psi

T-STUKKEN 90° VERLENGD
TES A 90° ALLONGES
TEES 90° ELONGATED

Gespoten. Ook geschikt voor electromoflas.
Injectés. Conviennent aussi pour l'electro-soudage.
Moulded. Also suitable for electric socket welding.

SDR 11 / ISO S-5

da	L3	L	z	s	KG/ST/PC	€/ST/PC
63	64.0	226	114.0	5,8	0,350	**13.24**
75	70.0	260	128.0	6,8	0,639	**21.97**
90	79.0	286	143.0	8,2	0,966	**31.25**
110	85.0	317	158.0	10,0	1,547	**45.74**
125	91.0	356	177.0	11,4	2,210	**62.77**
140	96.5	380	190.0	12,7	2,880	**100.87**
160	99.0	405	202,5	14,6	4,100	**130.92**
180	136.0	521	260.0	16,4	6,900	**171.75**
200	112.0	490	245.0	18,2	7,920	**246.10**
225	124.0	548	271.0	20,5	10,850	**292.43**
250	147.0	622	310.0	22,7	15.060	**377.57**
280	158.0	694	347.0	25,4	20.860	**566.17**
315	168.0	752	375.0	28,6	28.460	**725.06**
355	188.0	874	437.0	32.2	42.680	**1341.71**
400	198.0	940	470.0	36.3	56.460	**1930.19**

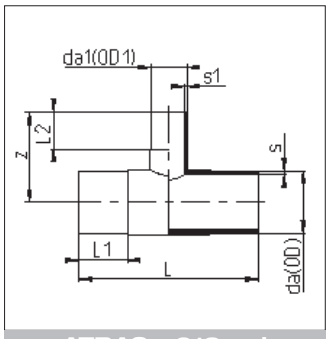

ATRAS - 218 psi

VERLOOP T-STUKKEN 90° VERLENGD
TES REDUITS A 90° ALLONGES
TEES 90° REDUCING ELONGATED

Gespoten. Ook geschikt voor electromoflas.
Injectés. Conviennent aussi pour l'electro-soudage.
Moulded. Also suitable for electric socket welding.

SDR 11 / ISO S-5

da/da1	s	Z	L	L1	L2	s1	KG/ST/PC	€/ST/PC
63/ 50	5.8	102.5	216	60.0	56.0	4.6	0.318	**13.83**
75/ 63	6.8	117.0	252	70.0	63.0	5.8	0.552	**22.07**
90/ 63	8.2	136.0	266	79.0	64.0	5.8	0.760	**30.82**
90/ 75	8.2	138.0	272	73.0	68.0	6.8	0.821	**31.06**
110/ 63	10.0	155.0	305	85.0	65.0	5.8	1.240	**45.70**
110/ 75	10.0	149.0	305	83.0	68.0	6.8	1.220	**45.70**
110/ 90	10.0	155.0	310	84.0	79.0	8.2	1.300	**46.36**
125/ 75	11.4	170.0	350	110.0	75.0	6.8	1.820	**63.58**
125/ 90	11.4	168.0	332	109.0	89.0	8.2	1.700	**63.58**
125/110	11.4	167.0	340	90.0	83.0	10.0	1.920	**63.58**
160/ 63	14.6	172.0	340	99.5	66.0	5.8	2.620	**124.99**
160/ 75	14.6	179.0	344	101.0	76.0	6.8	2.680	**126.03**
160/ 90	14.6	177.0	343	101.0	80.0	8.2	2.700	**126.03**
160/110	14.6	196.0	392	98.0	84.5	10.0	3.260	**129.19**
180/ 90	16.4	200.0	420	136.0	97.0	8.2	4.420	**173.25**
180/110	16.4	220.0	455	145.0	101.0	10.0	4.720	**173.25**
180/160	16.4	204.0	412	105.0	94.0	14.6	4.700	**173.24**
200/ 63	18.2	226.0	553	134.0	82.0	5.8	7.140	**233.08**
200/ 90	18.2	229.0	550	134.5	96.0	8.2	7.160	**233.08**
200/110	18.2	242.0	550	134.0	103.0	10.0	7.340	**233.08**
200/125	18.2	245.0	550	134.0	110.0	11.4	7.340	**233.08**
200/160	18.2	270.0	550	134.0	114.0	14.6	8.600	**233.08**
225/ 75	20.5	226.0	440	120.0	75.0	6.8	6.820	**292.87**
225/ 90	20.5	224.0	442	120.0	79.0	8.2	6.860	**292.87**
225/110	20.5	226.0	448	120.0	85.0	10.0	6.900	**294.04**
225/160	20.5	246.0	486	120.0	98.0	14.6	8.460	**295.08**
225/180	20.5	274.0	546	132.0	135.0	16.4	10.040	**296.11**
250/ 75	22.7	245.0	630	148.0	86.0	6.8	13.120	**491.22**
250/110	22.7	245.0	630	148.0	86.0	10.0	12.960	**491.22**
250/160	22.7	270.0	625	148.0	100.0	14.6	13.740	**491.22**
250/180	22.7	268.0	625	148.0	110.0	16.4	13.400	**491.22**
250/200	22.7	294.0	625	148.0	116.0	18.2	14.540	**491.22**
315/ 90	28.6	290.0	545	170.0	90.0	8.2	16.020	**797.56**
315/110	28.6	290.0	546	170.0	100.0	10.0	15.900	**797.56**
315/125	28.6	302.0	575	170.0	102.5	11.4	17.440	**797.56**
315/160	28.6	310.0	575	170.0	120.0	14.6	17.520	**797.56**
315/180	28.6	308.0	640	170.0	108.0	16.4	20.800	**833.81**
315/200	28.6	326.0	640	170.0	126.0	18.2	21.000	**833.81**
315/225	28.6	335.0	638	170.0	145.0	20.5	20.000	**833.81**
315/250	28.6	333.0	670	170.0	150.0	22.7	22.840	**833.81**

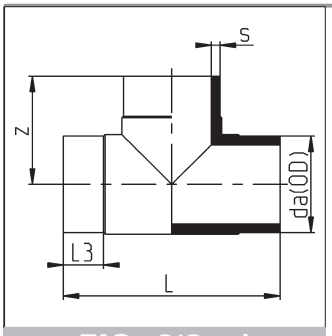

TAS - 218 psi

T-STUKKEN 90°
TES A 90°
TEES 90°

Gespoten - kort.
Injectés - court.
Moulded - short.

SDR 11 / ISO S-5

da	L	L3	z	s	KG/ST/PC	€/ST/PC
63	144	25.0	72.0	5,8	0,225	**9.24**
75	152	15.0	75.0	6,8	0,408	**18.61**
90	212	38.0	105.0	8,2	0,701	**27.82**
110	253	51.0	122.0	10,0	1,240	**40.84**
125	277	52.0	140.0	11,4	1,880	**56.23**
140	304	53.0	152.0	12,7	2,480	**71.27**
160	340	57.0	170.0	14,6	3,440	**119.85**
180	365	57.0	182.5	16,4	4,600	**153.61**
200	400	57.0	200.0	18,2	6.320	**220.12**
225	440	57.0	220.0	20,5	8,560	**261.80**
250	466	72.0	235.0	22,7	11.160	**333.06**
280	536	80.0	270.0	25,4	16,200	**450.31**
315	540	80.0	270.0	28,6	19.700	**639.67**
355	680	105.0	340.0	32,2	31,320	**822.32**
400	695	103.0	350.0	36,3	39.300	**1116.28**
450	900	130.0	450.0	40,9	65,520	**1622.21**
500	900	130.0	450.0	45,4	73.720	**2073.27**

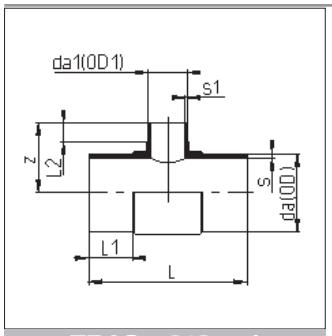

TRAS - 218 psi

VERLOOP T-STUKKEN 90°
TES REDUITS A 90°
TEES 90° REDUCING

Gespoten - kort.
Injectés - court.
Moulded - short.

SDR 11 / ISO S-5

da/da1	s	z	L	L1	L2	s1	KG/ST/PC	€/ST/PC
125/ 63	11.4	112	275	75	31	5.8	1.420	**62.07**
140/ 63	12.7	120	302	87	32	5.8	1.880	**77.91**
140/ 75	12.7	130	302	87	35	6.8	1.850	**77.91**
140/ 90	12.7	130	305	88	42	8.2	1.967	**79.16**
140/110	12.7	141	305	54	47	10.0	2.280	**79.16**
160/125	14.6	150	325	62	52	11.4	2.820	**131.37**
180/ 63	16.4	139	358	132	32	5.8	3.160	**163.09**
180/ 75	16.4	144	362	119	31	6.8	3.180	**163.09**
180/125	16.4	166	362	100	52	11.4	3.360	**168.34**
225/125	20.5	178	456	143	40	11.4	6.400	**283.96**

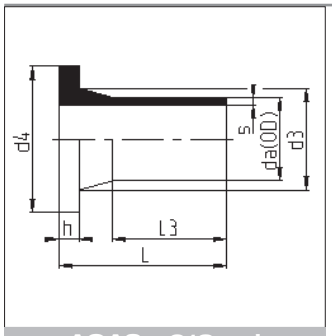

AQAS - 218 psi

VOORLASKRAGEN, VERLENGD
COLLETS ALLONGEES
STUBS ELONGATED

Gespoten . Ook geschikt voor electromoflas.
Injectées. Conviennent également pour l'électrosoudage.
Moulded. Also suitable for electro socket welding.

SDR 11 / ISO S-5

da	s	L	L3	d3	d4	h	KG/ST/PC	€/ST/PC
63	5.8	122	78.0	75	102	14	0.217	**7.78**
75	6.8	125	86.0	89	122	16	0.312	**10.04**
90	8.2	140	101.0	105	138	17	0.454	**13.11**
110	10.0	159	115.0	125	158	18	0.729	**16.75**
125	11.4	169	122.0	132	158	25	0.885	**20.39**
140	12.7	188	128.5	155	188	25	1.296	**26.88**
160	14.6	200	148.0	175	212	25	1.760	**33.11**
180	16.4	209	155.0	183	212	30	2.040	**46.27**
200	18.2	210	140.0	232	268	32	3.220	**58.18**
225	20.5	210	145.0	235	268	32	3.320	**62.72**
250	22.7	204	132.0	285	320	35	4.640	**96.36**
280	25.4	218	145.0	288	320	35	5.20	**135.61**
315	28.6	238	154.0	335	370	35	7.580	**185.22**
355	32.2	257	176.0	373	430	40	10.64	**290.31**
400	36.3	274	185.0	427	482	46	14.42	**512.15**

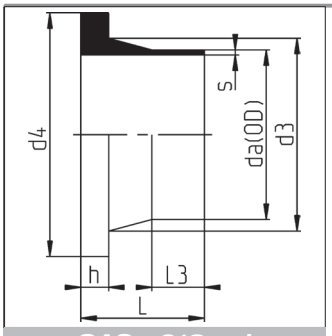

QAS - 218 psi

VOORLASKRAGEN
COLLETS
STUBS

Gespoten - kort.
Injectés - court.
Moulded - short.

SDR 11 / ISO S-5 / DIN

D	d3	d4	L	L3	s	h	KG/ST/PC	€/ST/PC
63	75	102	50.0	20.0	5.8	14	0.129	**5.34**
75	89	122	50.5	18.0	6.8	16	0.204	**6.33**
90	105	138	80.0	40.0	8.2	17	0.332	**9.05**
110	125	158	80.0	38.0	10.0	18	0.481	**11.65**
125	132	158	80.0	38.0	11.4	25	0.513	**14.06**
140	155	188	92.0	37.0	12.7	25	0.817	**18.00**
160	175	212	92.0	38.0	14.6	25	1.026	**22.69**
180	183	212	93.0	43.0	16.4	30	1.060	**32.12**
200	232	268	114.0	40.0	18.2	32	2.180	**38.87**
225	235	268	113.0	52.0	20.5	32	2.100	**41.37**
250	285	320	130.0	58.0	22.7	35	3.560	**65.73**
280	288	320	128.0	58.0	25.4	35	3.420	**71.76**
315	335	370	136.0	65.0	28.6	35	5.000	**84.60**
355	373	430	150.0	70.0	32.2	40	6.880	**149.46**
400	427	482	155.0	69.0	36.3	46	9.040	**269.15**
450	514	585	166.0	63.0	40.9	60	16.220	**346.45**
500	530	585	175.0	70.0	45.4	60	15.760	**399.24**
560	615	685	180.0	70.0	50.8	60	22.780	**754.14**
630	642	685	175.0	86.0	57.2	60	21.840	**850.25**

SDR 11 / ISO S-5
(ANSI : op aanvraag / sur demande / on request)

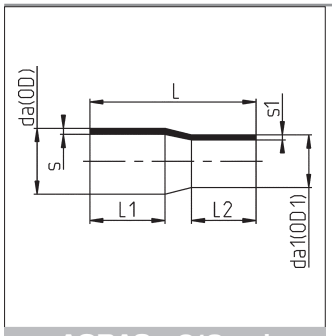

ACRAS - 218 psi

CONCENTRISCHE VERLOOPSTUKKEN VERLENGD
REDUCTIONS CONCENTRIQUES ALLONGEES
CONCENTRIC REDUCERS ELONGATED

Gespoten. Ook geschikt voor electromoflas.
Injectées. Conviennent également pour l'électrosoudage.
Moulded. Also suitable for electro socket welding.

SDR 11 / ISO S-5

da	da1	L	L1	L2	s	s1	KG/ST/PC	€/ST/PC
90	**63**	172	79.0	63.0	8.2	5.8	0.290	**16.43**
110	**63**	178	82.0	63.0	10.0	5.8	0.425	**22.11**
110	**90**	177	82.0	79.0	10.0	8.2	0.499	**22.11**
125	**63**	195	87.0	63.0	11.4	5.8	0.560	**26.55**
125	**90**	200	87.5	79.0	11.4	8.2	0.635	**26.55**
125	**110**	200	87.5	82.0	11.4	10.0	0.739	**26.61**
140	**125**	211	94.5	88.5	12.7	11.4	0.992	**38.23**
160	**90**	217	100.5	79.0	14.6	8.2	1.060	**51.02**
160	**110**	225	98.0	85.5	14.6	10.0	1.180	**51.17**
160	**125**	231	98.0	89.5	14.6	11.4	1.320	**51.17**
160	**140**	229	98.0	92.0	14.6	12.7	1.360	**51.46**
180	**125**	270	129.5	94.5	16.4	11.4	1.820	**66.30**
180	**160**	246	105.0	104.0	16.4	14.6	1.880	**66.30**
200	**160**	252	112.0	98.5	18.2	14.6	2.270	**72.67**
250	**160**	314	153.5	111.5	22.7	14.6	3.980	**158.05**
250	**225**	315	153.0	131.5	22.7	20.5	4.740	**165.33**
280	**250**	355	163.5	153.5	25.4	22.7	6.640	**220.32**
315	**225**	375	170.5	131.5	28.6	20.5	7.840	**283.47**
315	**250**	375	173.5	153.5	28.6	22.7	8.320	**283.47**

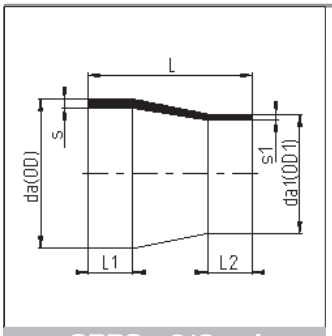

CRRS - 218 psi

CONCENTRISCHE VERLOOPSTUKKEN
REDUCTIONS CONCENTRIQUES
CONCENTRIC REDUCERS

Kort / court / short

SDR 11 / ISO S-5

da	da1	L	L1	L2	S	S1	KG/ST/PC	€/ST/PC
75	**63**	59	19	18	6.8	5.8	0.077	**8.87**
90	**50**	76	22	14	8.2	4.6	0.116	**9.89**
90	**63**	68	22	18	8.2	5.8	0.113	**9.89**
90	**75**	68	22	19	8.2	6.8	0.128	**9.89**
110	**50**	90	28	14	10.0	4.6	0.225	**12.59**
110	**63**	88	28	18	10.0	5.8	0.200	**12.59**
110	**75**	85	28	19	10.0	6.8	0.207	**12.59**
110	**90**	85	28	22	10.0	8.2	0.220	**12.59**
125	**63**	100	32	18	11.4	5.8	0.293	**16.11**
125	**75**	100	32	19	11.4	6.8	0.320	**16.11**
125	**90**	89	32	22	11.4	8.2	0.304	**16.11**
125	**110**	89	32	28	11.4	10.0	0.329	**16.11**
140	**75**	110	35	19	12.7	6.8	0.459	**19.52**
140	**90**	110	35	22	12.7	8.2	0.493	**19.52**
140	**110**	100	35	28	12.7	10.0	0.440	**19.52**
140	**125**	92	35	32	12.7	11.4	0.445	**19.52**
160	**90**	108	40	22	14.6	8.2	0.552	**22.91**
160	**110**	108	40	28	14.6	10.0	0.639	**22.91**
160	**125**	114	40	32	14.6	11.4	0.686	**22.91**
160	**140**	114	40	35	14.6	12.7	0.660	**22.91**
180	**90**	157	45	22	16.4	8.2	0.960	**35.95**
180	**110**	157	45	28	16.4	10.0	1.060	**33.87**
180	**125**	120	45	32	16.4	11.4	0.820	**31.20**
180	**140**	136	45	35	16.4	12.7	1.030	**29.62**
180	**160**	123	45	40	16.4	14.6	0.960	**28.25**
200	**140**	137	50	35	18.2	12.7	1.174	**80.98**
200	**160**	134	50	40	18.2	14.6	1.240	**71.61**
200	**180**	137	50	45	18.2	16.4	1.361	**64.11**
225	**140**	162	55	35	20.5	12.8	1.860	**96.12**
225	**160**	137	55	40	20.5	14.6	1.590	**82.99**
225	**180**	162	55	45	20.5	16.4	1.880	**78.97**
225	**200**	162	55	50	20.5	18.2	2.013	**69.66**
250	**160**	160	60	45	22.7	14.6	2.000	**110.80**
250	**180**	177	60	45	22.7	16.4	2.660	**102.60**
250	**200**	144	60	50	22.7	18.2	2.120	**94.37**
250	**225**	144	60	55	22.7	20.5	2.260	**89.39**
280	**200**	202	70	50	25.4	18.2	3.740	**123.42**
280	**225**	202	70	55	25.4	20.5	3.800	**115.07**
280	**250**	165	70	80	25.4	22.7	3.200	**110.80**
315	**200**	200	80	50	28.6	18.2	4.200	**157.55**
315	**225**	209	80	55	28.6	20.5	4.560	**139.35**
315	**250**	185	80	60	28.6	22.7	4.340	**126.87**
315	**280**	227	80	70	28.6	25.4	5.660	**119.80**

Da > 315 - 630 : op aanvraag / sur demande / on request

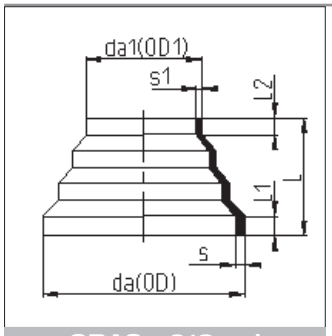

CRAS - 218 psi

CONCENTRISCHE VERLOOPSTUKKEN
REDUCTIONS CONCENTRIQUES
CONCENTRIC REDUCERS

Gespoten.
Opmerkingen :
- Deze verloopstukken zijn te gebruiken voor elke gewenste vermindering tussen de grootste en kleinste diameter. U kan de reductie af zagen op de gewenste diameter.

Injectées.
Remarques :
- Ces réductions sont utilisables dans tous les diamètres, entre le plus grand et le plus petit. Il suffit de couper la réduction au diamètre désiré.

Moulded.
Remarks :
- These reductions are for any reduction between the largest and smallest diameter. The reduction can be cut off at the desired diameter.

SDR 11 / ISO S-5

da	da1	L	L1	L2	s	s¹	KG/ST/PC	€/ST/PC
110	**63**	62	9	6	10.0	5.8	0.14	**12.73**
125	**75**	72	13	8	11.4	6.8	0.23	**14.38**
160	**110**	83	13	13	14.6	10.0	0.43	**47.94**
225	**160**	90	15	12	20.5	14.6	1.02	**130.05**
315	**225**	130	25	20	28.6	20.5	2.68	**143.39**
450	**315**	181	40	20	40.9	28.6	7.82	**510.27**

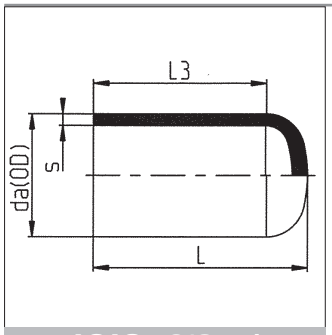

ACAS - 218 psi

EINDKAPPEN VERLENGD
BOUCHONS ALLONGES
END CAPS ELONGATED

Gespoten. Ook geschikt voor electromoflas.
Injectés. Conviennent aussi pour l'electro-soudage.
Moulded. Also suitable for electric socket welding.

SDR 11 / ISO S-5

da	L3	L	S	KG/ST/PC	€/ST/PC
63	64.0	80.5	5.8	0.092	**9.82**
75	75.0	91.0	6.8	0.149	**15.21**
90	84.0	107.0	8.2	0.253	**23.09**
110	105.0	133.0	10.0	0.476	**31.28**
125	100.0	132.0	11.4	0.586	**33.81**
140	106.0	144.0	12.7	0.830	**42.28**
160	123.5	165.0	14.6	1.198	**47.39**
180	111.0	160.0	16.4	1.690	**61.61**
200	117.0	181.5	18.2	2.000	**76.75**
225	130.0	202.5	20.5	2.820	**91.61**
250	160.0	223.0	22.7	3.910	**137.27**
280	162.0	248.0	25.4	5.360	**194.96**
315	167.0	269.0	28.6	7.100	**262.14**

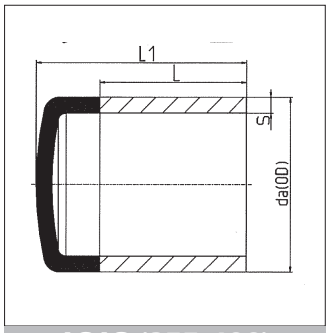

ACAS (355-400)

SDR 11 / ISO S-5

da	L3	L	L1	S	KG/ST/PC	€/ST/PC
355	420	300	420	32.2	16.23	
400	430	300	430	36.3	21.20	

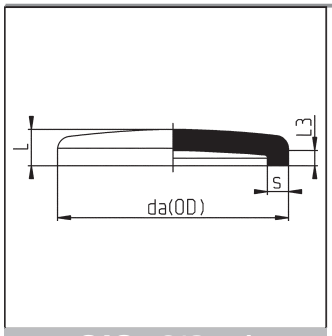

CAS - 218 psi

EINDKAP
BOUCHON
END CAPS

Gespoten - kort.
Injectés - court.
Moulded - short.

SDR 11 / ISO S-5

da	L3	L	s	KG/ST/PC	€/ST/PC
450	64	140	40.9	11.55	**501.62**
500	65	160	45.4	14.80	**629.16**

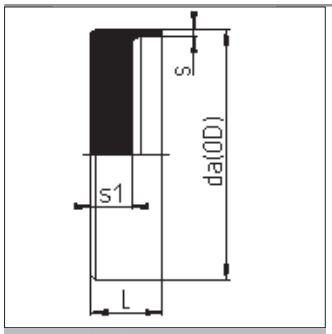

CAS - 218 psi

EINDKAP
BOUCHON
END CAPS

Gedraaid - kort
Tourné - court.
Machined - short.

SDR 11 / ISO S-5

da	s	L	s1	KG/ST/PC	€/ST/PC
560	50.8	120	93.0	23.00	
630	57.2	133	103.0	29.40	

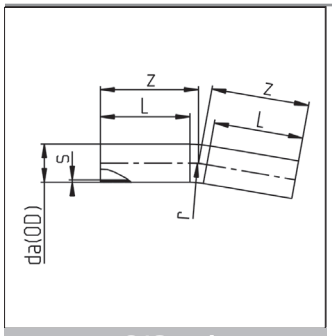

218 psi

SWEEP BEND 11° VERLENGD
SWEEP BEND 11° ALLONGES
SWEEP BEND 11° ELONGATED

Uit buis gevormd. Ook geschikt voor electromoflas.
Formé d'un tuyau. Conviennent aussi pour l'electro-soudage.
Formed out of a pipe. Also suitable for electric socket welding.

SDR 11 / ISO S-5

da	s	z	r	L	KG/ST/PC	€/ST/PC
90	8.2	350	135	150	1.42	**64.92**
110	10.0	330	165	150	2.07	**124.09**
125	11.4	380	188	150	3.38	**138.23**
140	12.7	395	210	150	3.96	**153.87**
160	14.6	415	480	150	5.54	**183.24**
180	16.4	450	270	150	7.49	**221.51**
200	18.2	480	300	150	9.88	**252.63**
225	20.5	510	338	150	13.36	**283.76**
250	22.7	540	375	250	17.66	**431.41**
280	25.4	450	420	250	22.20	**628.15**
315	28.6	500	496	300	25.00	**824.55**
355	32.2	590	560	300	42.73	**1715.38**
400	36.3	650	637	300	55.08	**2217.67**
450	40.9	700	711	300	69.74	**3000.09**
500	45.4	750	783	350	93.30	**3858.30**
560	50.8	800	877	350	163.31	**5044.96**
630	57.2	850	955	350	168.00	**6653.41**

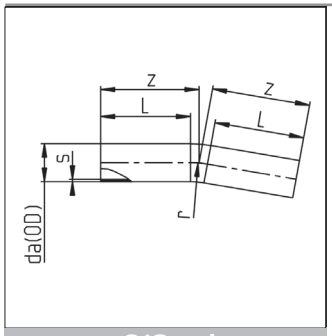

218 psi

SWEEP BEND 22° VERLENGD
SWEEP BEND 22° ALLONGES
SWEEP BEND 22° ELONGATED

Uit buis gevormd. Ook geschikt voor electromoflas.
Formé d'un tuyau. Conviennent aussi pour l'electro-soudage.
Formed out of a pipe. Also suitable for electric socket welding.

SDR 11 / ISO S-5

da	s	z	r	L	KG/ST/PC	€/ST/PC
90	8.2	340	135	150	1.42	**64.92**
110	10.0	330	165	150	2.07	**124.09**
125	11.4	380	188	150	3.06	**138.23**
140	12.7	395	210	150	3.96	**153.87**
160	14.6	420	480	150	5.66	**183.24**
180	16.4	450	270	150	7.49	**221.51**
200	18.2	480	300	150	9.88	**252.63**
225	20.5	510	338	150	13.36	**283.76**
250	22.7	540	375	250	17.66	**431.41**
280	25.4	450	420	250	22.20	**628.15**
315	28.6	500	496	300	32.51	**824.55**
355	32.2	590	560	300	42.73	**1715.38**
400	36.3	650	637	300	55.09	**2217.67**
450	40.9	700	711	300	69.74	**3000.09**
500	45.4	750	783	350	93.10	**3858.30**
560	50.8	800	877	350	163.31	**5044.96**
630	57.2	850	955	350	227.60	**6653.41**

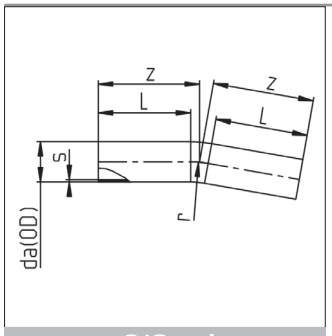

218 psi

SWEEP BEND 30° VERLENGD
SWEEP BEND 30° ALLONGES
SWEEP BEND 30° ELONGATED

Uit buis gevormd. Ook geschikt voor electromoflas.
Formé d'un tuyau. Conviennent aussi pour l'electro-soudage.
Formed out of a pipe. Also suitable for electric socket welding.

SDR 11 / ISO S-5

da	s	z	r	L	KG/ST/PC	€/ST/PC
90	8.2	350	135	150	1.42	**64.92**
110	10.0	330	165	150	2.07	**124.09**
125	11.4	380	188	150	3.06	**138.23**
140	12.7	400	210	150	3.96	**172.36**
160	14.6	420	480	150	5.54	**183.24**
180	16.4	450	270	150	7.49	**221.51**
200	18.2	480	300	150	9.88	**252.63**
225	20.5	520	338	150	13.36	**283.76**
250	22.7	560	375	250	17.66	**600.20**
280	25.4	450	420	250	22.20	**628.15**
315	28.6	500	496	300	32.51	**824.55**
355	32.2	590	560	300	42.73	**1715.38**
400	36.3	650	637	300	57.59	**2217.67**
450	40.9	700	711	300	77.14	**3000.09**
500	45.4	750	783	350	143.42	**3858.30**
560	50.8	800	877	350	179.64	**5044.96**
630	57.2	850	955	350	258.63	**6653.41**

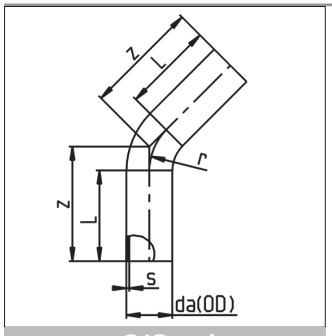

218 psi

SWEEP BEND 45° VERLENGD
SWEEP BEND 45° ALLONGES
SWEEP BEND 45° ELONGATED

Uit buis gevormd. Ook geschikt voor electromoflas.
Formé d'un tuyau. Conviennent aussi pour l'electro-soudage.
Formed out of a pipe. Also suitable for electric socket welding.

SDR 11 / ISO S-5

da	s	z	r	L	KG/ST/PC	€/ST/PC
90	8.2	350	135	150	1.42	**64.92**
110	10.0	340	165	150	2.07	**124.09**
125	11.4	380	188	150	3.06	**138.23**
140	12.7	405	210	150	3.96	**153.87**
160	14.6	425	240	150	5.54	**183.24**
180	16.4	460	270	150	7.49	**221.51**
200	18.2	495	300	150	9.88	**252.63**
225	20.5	525	338	150	13.36	**283.76**
250	22.7	570	375	250	17.66	**600.20**
280	25.4	510	420	250	22.20	**628.15**
315	28.6	560	496	300	31.60	**824.57**
355	32.5	630	560	300	41.00	**1715.38**
400	36.3	670	637	300	58.50	**2217.67**
450	40.9	750	711	300	82.60	**3000.09**
500	45.4	900	783	350	113.10	**3858.30**
560	50.8	950	877	350	164.30	**5044.96**
630	57.2	1000	955	350	194.00	**6653.41**

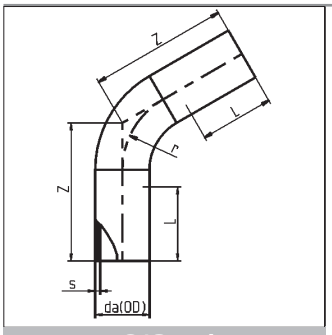

218 psi

SWEEP BEND 60° VERLENGD
SWEEP BEND 60° ALLONGES
SWEEP BEND 60° ELONGATED

Uit buis gevormd. Ook geschikt voor electromoflas.
Formé d'un tuyau. Conviennent aussi pour l'electro-soudage.
Formed out of a pipe. Also suitable for electric socket welding.

SDR 11 / ISO S-5

da	s	z	r	L	KG/ST/PC	€/ST/PC
90	8.2	350	135	260	1.284	**82.47**
110	10.0	340	165	240	2.067	**123.53**
125	11.4	390	188	150	2.884	**156.15**
140	12.7	400	210	280	4.617	**190.92**
160	14.6	430	240	290	5.720	**210.55**
180	16.4	460	270	300	8.510	**281.42**
200	18.2	490	300	320	10.185	**321.34**
225	20.5	530	338	330	13.845	**356.17**
250	22.7	700	375	480	22.820	**548.20**
280	25.4	570	420	331	28.700	**947.90**
315	28.6	630	496	350	44.030	**1283.05**
355	32.2	760	560	300	59.170	**2054.34**
400	36.3	780	637	300	83.460	**2733.65**
450	40.9	820	711	300	117.830	**3704.56**
500	45.4	960	783	350	169.490	**4960.56**
560	50.8	980	877	350	236.800	**6949.12**
630	57.2	1200	955	350	331.080	**9692.61**

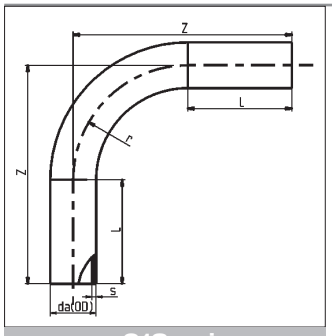

218 psi

SWEEP BEND 90° VERLENGD
SWEEP BEND 90° ALLONGES
SWEEP BEND 90° ELONGATED

Uit buis gevormd. Ook geschikt voor electromoflas.
Formé d'un tuyau. Conviennent aussi pour l'electro-soudage.
Formed out of a pipe. Also suitable for electric socket welding.

SDR 11 / ISO S-5

da	s	z	r	L	KG/ST/PC	€/ST/PC
90	8.2	380	135	150	1.420	**82.47**
110	10.0	440	165	150	2.700	**123.53**
125	11.4	470	188	150	3.060	**156.15**
140	12.7	520	210	150	4.755	**190.92**
160	14.6	550	240	150	6.620	**210.55**
180	16.4	590	270	150	9.085	**281.42**
200	18.2	650	300	150	12.220	**321.34**
225	20.5	675	338	150	16.560	**356.17**
250	22.7	780	375	250	22.000	**548.20**
280	25.4	750	420	250	27.500	**947.90**
315	28.6	900	496	300	32.510	**1283.05**
355	32.2	1000	560	300	55.000	**2054.34**
400	36.4	1050	637	300	78.600	**2733.65**
450	40.9	1150	711	300	111.200	**3704.56**
500	45.4	1300	783	350	152.600	**4960.56**
560	50.8	1350	877	350	310.290	**6949.12**
630	57.2	1600	955	350	295.200	**9692.61**

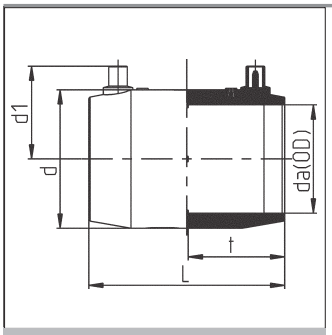

AMAM - 218 psi

ELECTROLASMOFFEN
MANCHONS ELECTRO-SOUDAGE
ELECTRO WELDING SLEEVES

Gespoten
Injectés
Moulded

PE 100 RC , water/eau : 25 bar

SDR 11 / ISO S-5

da	t	L	d	d1	SDR	KG/ST/PC	€/ST/PC
63	62.0	124.5	83.0	59.0	17-7.4	0.249	**7.99**
75	68.5	139.5	97.0	65.5	17-7.4	0.350	**11.40**
90	68.0	138.5	112.0	72.0	17-7.4	0.450	**15.17**
110	73.0	149.0	136.0	83.0	17-7.4	0.712	**18.24**
125	83.5	169.5	155.0	91.0	17-7.4	0.980	**25.65**
140	88.5	180.0	173.0	99.0	17-7.4	1.370	**30.09**
160	88.0	180.0	197.0	109.0	17-7.4	1.710	**35.35**
180	97.5	199.5	221.0	119.0	26-7.4	2.460	**50.74**
200	105.0	215.5	245.0	127.0	17-7.4	3.140	**59.91**
225	112.0	229.0	275.0	142.0	17-7.4	4.200	**77.18**
250	116.5	238.0	310.0	155.0	26-7.4	4.820	**113.73**
280	121.5	249.0	346.0	180.0	26-7.4	7.700	**154.11**
315	127.5	260.0	386.0	180.5	26-7.4	8.000	**185.36**

PE 100 RC , water/eau : 16 bar

SDR 11 / ISO S-5

da	t	L	d	d1	SDR	KG/ST/PC	€/ST/PC
355	136.5	280	445	225.0	26-11	14.75	**339.43**
400	146.5	300	499	254.0	26-11	19.80	**425.62**
450	166.0	338	552	260.0	17-11	20.60	**538.32**
500	178.5	358	604	289.0	17-11	26.00	**651.34**

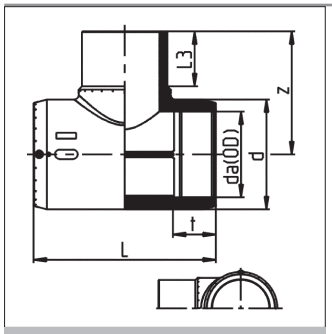

ATAM - 218 psi

T-STUKKEN 90°
TES A 90°
TEES 90°

Gespoten
Injectés
Moulded

PE 100 RC, 218 PSI, 16 bar

SDR 11 / ISO S-5

da	z	L	L3	d	t	d1	KG/ST/PC	€/ST/PC
63	116.0	185.5	64.5	88.0	62.0	60.0	0.538	**22.12**
75	128.0	210.5	71.5	97.0	69.0	64.0	0.650	**31.20**
90	171.5	293.0	91.0	124.0	76.0	72.5	1.720	**39.43**
110	190.0	326.5	101.0	148.5	71.5	85.0	2.670	**63.18**
125	215.0	347.5	111.0	170.0	86.0	93.1	3.700	**79.55**
160	245.0	370.5	122.0	211.5	85.0	110.5	6.120	**147.35**
180	275.0	419.5	130.0	232.0	98.5	123.5	9.000	**256.44**
200	302.0	427.0	136.0	264.0	105.0	139.0	10.980	**328.67**
225	325.0	479.5	147.0	287.0	110.0	150.0	13.400	**401.81**

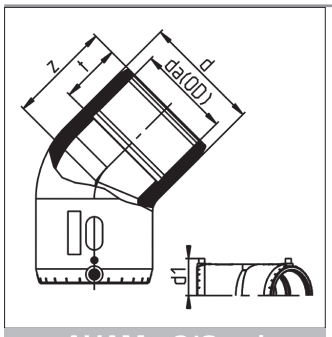

AHAM - 218 psi

KNIEEN 45°
COUDES A 45°
ELBOWS 45°

PE 100 RC, 218 PSI, 16 bar

SDR 11 / ISO S-5

da	t	z	d	d1	KG/ST/PC	€/ST/PC
63	61.5	82	82.5	58.5	0.327	**22.09**
75	68.5	94	97.0	66.0	0.500	**31.63**
90	71.0	113	115.0	74.0	0.850	**41.74**
110	72.0	124	140.0	82.5	1.430	**61.22**
125	86.0	124	161.0	92.0	1.830	**84.77**
160	89.0	164	200.0	112.0	3.400	**166.16**
180	99.0	172	224.0	119.0	4.890	**242.52**
200	106.5	178	248.5	130.5	6.000	**334.91**
225	113.5	190	279.0	145.5	7.990	**360.90**

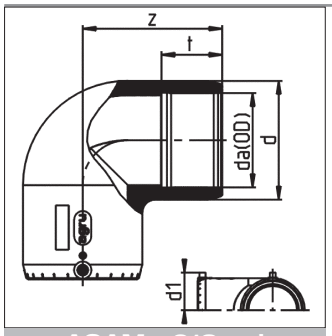

AGAM - 218 psi

KNIEEN 90°
COUDES A 90°
ELBOWS 90°

PE 100 RC, 218 PSI, 16 bar

SDR 11 / ISO S-5

da	t	z	d	d1	KG/ST/PC	€/ST/PC
63	62.7	100	83	60.0	0.392	**22.09**
75	70.0	114	97	66.0	0.607	**31.63**
90	70.5	147	114	73.0	1.030	**41.74**
110	70.5	164	140	82.5	1.800	**61.22**
125	84.0	164	161	91.0	2.460	**84.77**
160	87.0	222	200	109.0	4.700	**166.16**
180	98.5	230	224	118.0	6.250	**242.52**
200	106.5	250	248	129.5	8.000	**334.91**
225	112.5	274	279	144.0	10.800	**360.90**

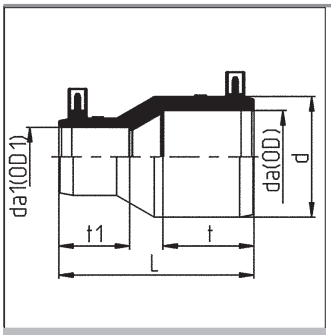

ARAM - 218 psi

REDUCTIES
REDUCTIONS
REDUCERS

PE 100 RC, 218 PSI, 16 bar

SDR 11 / ISO S-5

da/da1	L	d	d1	t	t1	KG/ST/PC	€/ST/PC
75/63	155.5	97.0	63.0	69.0	61.5	0.380	**25.73**
90/63	171.5	117.0	73.5	71.5	62.5	0.550	**29.71**
110/63	200.5	140.5	84.0	72.0	62.5	0.860	**48.42**
110/90	180.5	140.5	84.0	72.0	71.0	0.940	**48.42**
125/90	183.5	156.0	90.0	83.0	68.7	0.992	**59.48**
125/110	173.5	156.0	90.0	82.0	69.5	1.050	**59.48**
160/90	240.5	200.0	108.5	89.5	71.0	1.890	**84.49**
160/110	224.5	200.0	108.5	89.5	71.0	1.980	**86.61**
225/160	282.5	280.0	147.0	113.0	88.0	5.120	**196.57**

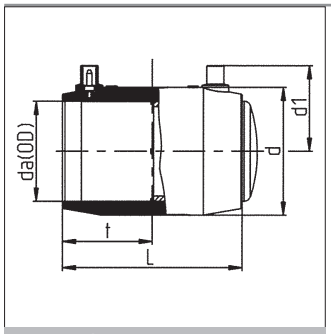

ACAM - 218 psi

EINDKAPPEN
BOUCHONS
END CAPS

PE 100 RC, 218 PSI, 16 bar

SDR 11 / ISO S-5

da	L	d	d1	t	KG/ST/PC	€/ST/PC
63	124.5	83.0	59.0	62.0	0.35	**19.19**
75	139.5	97.0	65.5	68.5	0.50	**30.16**
90	138.5	112.0	72.0	68.0	0.73	**42.88**
110	149.5	136.0	83.0	74.0	1.23	**54.99**
125	169.5	155.0	91.0	83.5	1.88	**67.60**
140	180.0	180.0	99.0	88.5	2.40	**90.07**
160	180.0	197.0	107.5	88.0	2.92	**94.96**
180	199.5	221.0	119.0	97.5	4.18	**129.72**
200	215.5	245.0	127.0	105.0	5.32	**147.36**
225	229.0	275.0	142.0	112.0	7.20	**187.59**
250	238.0	310.0	155.0	116.5	9.84	**279.52**
280	249.0	346.0	180.0	121.5	12.66	**386.63**
315	260.0	386.0	187.0	127.5	17.06	**487.11**

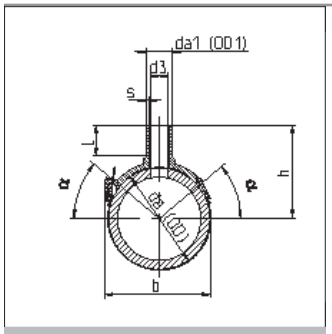

288 - 218 psi

AANBOORZADEL - TYPE 288
SELLE DE SUPPORT - TYPE 288
SPIGOT SADDLE - TYPE 288

SDR 11, ISO S-5

da/da1	h	d3	b	s	alph(°)	L	KG/ST/PC	€/ST/PC
90/ 63	141.5	45	-	5.8	0	77	0.260	**88.71**
110/ 63	153.5	45	143.5	5.8	0	77	0.305	**89.72**
125/ 63	158.5	45	155.0	5.8	0	77	0.323	**134.94**
***New* 140/ 63**	166.0	45	170.0	5.8	0	77	0.323	**135.56**
160/ 63	184.0	45	193.5	5.8	0	77	0.510	**106.10**
160/ 90	202.0	65	196.5	8.2	0	92	0.881	**129.32**
160/110	202.0	84	196.5	10.0	0	98	0.949	**130.36**
180/ 63	193.0	45	214.5	5.8	0	77	0.589	**107.47**
180/ 90	216.0	65	216.5	8.2	0	92	1.005	**130.96**
180/110	216.0	84	216.5	10.0	0	98	1.095	**131.93**
225/ 63	219.0	45	244.5	5.8	40	77	0.555	**127.14**
225/ 90	237.0	65	244.5	8.2	30	92	0.942	**143.21**
225/110	237.0	84	244.5	10.0	30	97	1.018	**144.39**
250/ 63	231.0	45	266.0	5.8	40	77	0.550	**135.67**
250/ 75	251.0	55	266.0	6.8	30	86	0.731	**154.54**
250/ 90	251.0	65	266.0	8.2	30	92	0.991	**154.54**
250/110	251.0	84	266.0	10.0	30	98	1.068	**155.64**
280/ 63	231.0	45	305.0	5.8	40	77	0.550	**136.26**
280/ 90	251.0	65	305.0	8.2	30	92	1.038	**186.54**
280/110	251.0	84	305.0	10.0	30	98	1.068	**187.92**
315/ 63	266.0	45	294.0	5.8	40	77	0.619	**136.68**
315/ 90	285.0	65	326.5	8.2	30	92	1.059	**156.19**
315/110	285.0	84	326.5	10.0	30	98	1.185	**157.39**
***New* 355/ 63**	266.0	45	294.0	5.8	40	77	0.619	**176.91**
***New* 355/ 90**	285.0	65	326.5	8.2	30	92	1.060	**209.85**
***New* 355/110**	285.0	84	326.5	10.0	30	98	1.190	**218.03**

Onderste deel : schroefbaar
Partie inf. : vissable
Bottom part: screwable

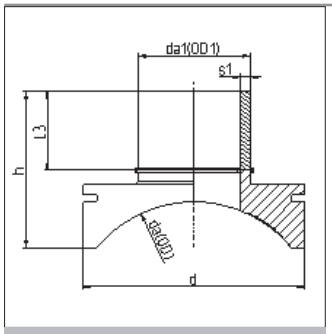

289 - 218 psi

AANBOORZADEL, TYPE TOPLOAD - 289
SELLE DE SUPPORT, TYPE TOPLOAD - 289
SPIGOT SADDLE, TYPE TOPLOAD - 289

SDR 11, ISO S-5

da/da1	MOP	h	d	s1	L3	KG/ST/PC
355/ 90	16	176	200	8.2	94.0	1.080
355/110	16	194	250	10.0	97.0	2.230
355/125	16	209	280	11.4	102.0	2.980
400/ 90	16	173	200	8.2	94.0	1.260
400/110	16	189	250	10.0	97.0	2.180
400/125	16	204	280	11.4	102.0	2.900
450/ 90	16	171	200	8.2	94.0	1.050
450/110	16	186	250	10.0	97.0	1.880
450/125	16	199	280	11.4	102.0	3.300
500/ 90	16	168	200	8.2	94.0	1.220
500/110	16	182	250	10.0	97.0	1.860
500/125	16	195	280	11.4	102.0	2.740
560/ 90	16	166	200	8.2	94.0	1.065
560/110	16	179	250	10.0	97.0	1.807
560/125	16	191	280	11.4	102.0	2.680
630/ 90	16	166	200	8.2	94.0	1.135
630/110	16	176	250	10.0	97.0	1.980
630/125	16	188	280	11.4	102.0	2.600

prijzen op aanvraag / prix sur demande / prices on request

Een installatie kit vereist.
Une kit d'installation est nécessaire.
An installation kit is required.

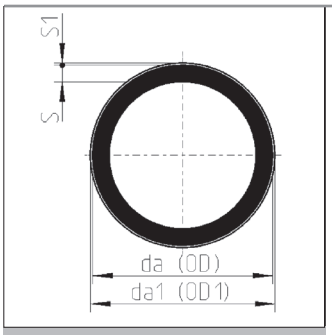

250 psi

DRUKBUIS - RECHTE LENGTEN - ZWART
TUYAUX DE PRESSION - LONGUEURS DROITES - NOIR
PRESSURE PIPE - STRAIGHT LENGTHS - BLACK

L = 12 m
Volgens FM1613.

SDR 9 / ISO S-4

da	s	KG/M
63	7.1	1.30
75	8.4	1.80
90	10.1	2.60
110	12.3	3.80
125	14.0	4.90
140	15.7	6.20
160	17.9	8.05
180	20.1	10.20
200	22.4	12.60
225	25.2	15.90
250	27.9	19.56
280	31.3	24.60
315	35.2	31.10
355	39.7	39.50
400	44.7	50.10
450	50.3	63.40
500	55.8	78.10

prijs op aanvraag / prix sur demande / prices on request

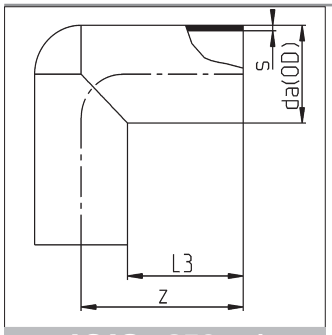

AGAS - 250 psi

KNIEEN 90°
COUDES A 90°
ELBOWS 90°

Met verlengde benen, gespoten.
Ook geschikt voor electromoflas.

Coudes injectés, à branches allongées.
Conviennent aussi pour l'electro-soudage dans l'emboîture.

Elongated, moulded.
Also suitable for electro socket welding.

SDR 7.4 / uiteinden bewerkt naar SDR 9 / conseils adaptés de SDR 9 / ends machined to SDR 9 ISO S-4

da	L3	z	s	KG/ST/PC	€/ST/PC
63	76.0	109.0	7.1	0.309	**19.44**
75	84.5	124.0	8.4	0.489	**24.17**
90	82.5	126.0	10.1	0.730	**30.27**
110	88.0	145.5	12.3	1.190	**57.99**
125	101.0	165.0	14.0	1.740	**71.66**
160	101.0	180.0	17.9	3.160	**108.34**
200	114.5	214.0	22.4	5.750	**162.06**

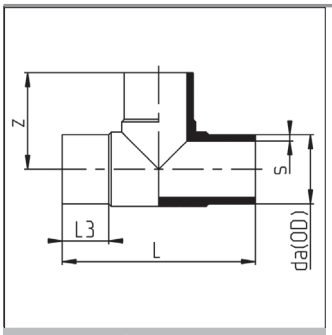

ATAS - 250 psi

T-STUKKEN 90° VERLENGD
TES A 90° ALLONGES
TEES 90° ELONGATED

Gespoten. Ook geschikt voor electromoflas.
Injectés. Conviennent aussi pour l'electro-soudage.
Moulded. Also suitable for electric socket welding.

SDR 7.4 / uiteinden bewerkt naar SDR 9 / conseils adaptés de SDR 9 / ends machined to SDR 9

da	L3	L	z	s	€/ST/PC
63	63	217	110	7.1	**19.87**
90	79	275	145	10.1	**46.85**
110	82	315	160	15.1	**68.60**
125	87	346	175	17.1	**94.16**
160	98	408	208	21.9	**196.34**
200	112	495	248	27.4	**369.11**
225	120	540	270	30.8	**438.60**

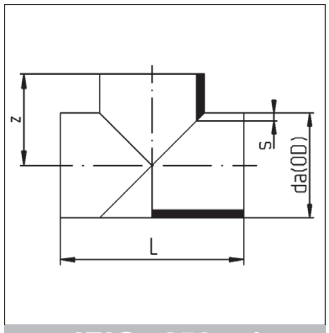

ATAS - 250 psi

Gesegmenteerd. Ook geschikt voor electromoflas.
Segmenté. Conviennent aussi pour l'electro-soudage.
Segmented. Also suitable for electric socket welding.

SDR 7.4 / uiteinden bewerkt naar SDR 9 / conseils adaptés de SDR 9 / ends machined to SDR 9

da	L1	L	z	s
250	140	530	265.0	27.9
280	150	580	290.0	31.3
315	170	655	327.5	35.2
355	180	715	357.5	39.7
400	200	800	400.0	44.7
450	225	900	450.0	50.3
500	235	970	485.0	55.8

prijs op aanvraag / prix sur demande / prices on request

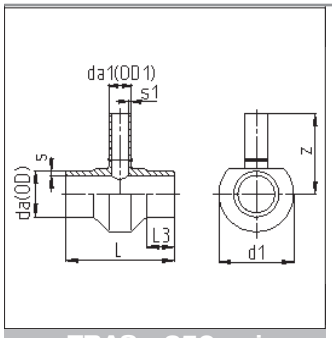

TRAS - 250 psi

VERLOOP T-STUKKEN 90°
TES REDUITS A 90°
TEES 90° REDUCING

Machined. **prijs op aanvraag / prix sur demande / prices on request**

SDR 9 / ISO S-4

da/da1	s	z	L3	s1	d1	L	KG/ST/PC
90/ 63	10.1	170.0	50	7.1	154	213	1.30
90/ 75	10.1	170.0	50	8.4	159	225	1.60
110/ 63	12.3	180.0	50	7.1	172	213	2.01
110/ 75	12.3	180.0	50	8.4	177	255	2.20
110/ 90	12.3	180.0	50	10.1	184	240	2.30
125/ 63	14.0	187.5	50	7.1	186	213	2.80
125/ 75	14.0	187.5	50	8.4	191	225	2.80
125/ 90	14.0	187.5	50	10.1	197	240	3.00
140/ 63	15.7	195.0	50	7.1	201	213	3.50
140/ 75	15.7	195.0	50	8.4	205	225	3.20
140/ 90	15.7	195.0	50	10.1	211	240	3.80
140/110	15.7	195.0	50	12.3	220	260	4.10
140/125	15.7	195.0	50	14.0	228	275	4.40
160/ 63	17.9	205.0	50	7.1	220	213	5.00
160/ 75	17.9	205.0	50	8.4	223	225	5.20
160/ 90	17.9	205.0	50	10.1	229	240	5.40
160/110	17.9	205.0	50	12.3	238	260	4.72
160/125	17.9	205.0	50	14.0	245	275	5.80
180/ 63	20.1	215.0	50	7.1	239	213	6.40
180/ 75	20.1	215.0	50	8.4	242	225	4.50
180/ 90	20.1	215.0	50	10.1	247	240	7.00
180/110	20.1	215.0	50	12.3	255	260	7.70
180/125	20.1	215.0	50	14.0	262	275	8.00
200/ 63	22.4	225.0	50	7.1	258	213	8.20
200/ 75	22.4	225.0	50	8.4	262	225	6.80
200/ 90	22.4	225.0	50	10.1	266	240	8.50
200/110	22.4	225.0	50	12.3	274	260	8.80
200/125	22.4	225.0	50	14.0	280	275	9.00
200/140	22.4	225.0	50	15.7	287	290	9.30
200/160	22.4	225.0	50	17.9	297	310	9.70
225/ 63	25.2	237.5	50	7.1	283	213	11.00
225/ 75	25.2	237.5	50	8.4	286	225	8.90
225/ 90	25.2	237.5	50	10.1	290	240	12.00
225/110	25.2	237.5	50	12.3	297	260	13.00
225/125	25.2	237.5	50	14.0	303	275	14.00
225/140	25.2	237.5	50	15.7	309	209	13.50
225/160	25.2	237.5	50	17.9	318	310	14.50
250/ 63	27.9	250.0	50	7.1	307	213	15.00
250/ 75	27.9	250.0	50	8.4	340	225	15.50
250/ 90	27.9	250.0	50	10.1	314	240	16.00
250/110	27.9	237.5	50	12.3	320	260	17.00
250/125	27.9	250.0	50	14.0	325	275	17.00
250/140	27.9	250.0	50	15.7	332	290	18.00
250/160	27.9	250.0	50	17.9	340	310	19.00
250/180	27.9	300.0	50	20.1	350	330	20.00
280/ 63	31.3	265.0	50	7.1	336	213	18.00
280/ 75	31.3	265.0	50	8.4	339	225	19.00
280/ 90	31.3	265.0	50	10.1	343	240	19.00
280/110	31.3	250.0	50	12.3	348	260	20.00
280/125	31.3	250.0	50	14.0	353	275	21.00
280/140	31.3	265.0	50	15.7	359	290	23.00
280/160	31.3	265.0	50	17.9	367	310	24.00
280/180	31.3	315.0	50	20.1	376	330	25.00

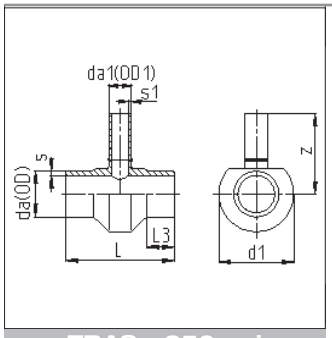

TRAS - 250 psi

VERLOOP T-STUKKEN 90°
TES REDUITS A 90°
TEES 90° REDUCING

Machined. **prijs op aanvraag / prix sur demande / prices on request**

SDR 9 / ISO S-4

da/da1	s	z	L3	s1	d1	L	KG/ST/PC
315/ 63	35.2	282.5	50	7.1	371	213	22.0
315/ 75	35.2	282.5	50	8.4	373	225	26.0
315/ 90	35.2	282.5	50	10.1	376	240	23.0
315/110	35.2	282.5	50	12.3	382	260	11.4
315/140	35.2	282.5	50	15.7	391	290	29.0
315/160	35.2	282.5	50	17.9	399	310	24.7
315/180	35.2	332.5	50	20.1	407	330	25.7
315/200	35.2	332.5	50	22.4	417	350	24.9
315/225	35.2	332.5	50	25.2	429	375	25.0
355/ 63	39.7	302.5	75	7.1	410	263	27.8
355/ 75	39.7	302.5	75	8.4	412	275	30.0
355/ 90	39.7	302.5	75	10.1	415	290	28.2
355/110	39.7	302.5	75	12.3	420	310	29.0
355/140	39.7	302.5	75	15.7	429	340	33.0
355/160	39.7	302.5	75	17.9	436	360	29.8
355/180	39.7	352.5	75	20.1	444	380	30.6
355/200	39.7	352.5	75	22.4	452	400	34.0
355/225	39.7	352.5	75	25.2	464	425	35.0
355/250	39.7	352.5	75	27.9	476	450	36.0
400/ 63	44.7	325.0	75	7.1	455	263	33.5
400/ 75	44.7	325.0	75	8.4	457	275	34.0
400/ 90	44.7	325.0	75	10.1	459	290	17.8
400/110	44.7	325.0	75	12.3	464	310	35.7
400/160	44.7	325.0	75	17.9	478	360	38.9
400/180	44.7	375.0	75	20.1	485	380	41.0
400/200	44.7	375.0	75	22.4	493	400	30.9
400/225	44.7	375.0	75	25.2	504	425	39.0
400/250	44.7	375.0	75	27.9	515	450	40.0
400/280	44.7	375.0	75	31.3	530	480	41.0
400/315	44.7	375.0	75	35.2	550	515	43.0
450/ 63	50.3	350.0	75	7.1	504	263	40.5
450/ 75	50.3	350.0	75	8.4	506	275	37.0
450/ 90	50.3	350.0	75	10.1	509	290	38.0
450/110	50.3	350.0	75	12.3	512	310	41.2
450/125	50.3	350.0	75	14.0	516	325	39.0
450/140	50.3	350.0	75	15.7	520	340	40.0
450/160	50.3	350.0	75	17.9	525	360	42.0
450/180	50.3	400.0	75	20.1	532	380	42.7
450/200	50.3	400.0	75	22.4	539	400	37.2
450/225	50.3	400.0	75	25.2	549	425	42.0
450/250	50.3	400.0	75	27.9	560	450	50.0
450/280	50.3	400.0	75	31.3	574	480	43.0
450/315	50.3	400.0	75	35.2	591	515	65.1
500/ 63	55.8	375.0	90	7.1	554	293	42.7
500/ 75	55.8	375.0	75	8.4	556	275	41.0
500/ 90	55.8	375.0	75	10.1	558	290	42.0
500/110	55.8	375.0	90	12.3	561	340	43.4
500/125	55.8	375.0	75	14.0	565	325	43.0
500/140	55.8	375.0	75	15.7	568	340	44.0
500/160	55.8	375.0	90	17.9	573	390	44.0
500/180	55.8	425.0	90	20.1	579	410	44.5
500/200	55.8	425.0	90	22.4	586	430	44.7
500/225	55.8	425.0	90	25.2	595	455	45.0
500/250	55.8	425.0	75	27.9	605	450	46.0
500/280	55.8	425.0	75	31.3	618	480	47.0

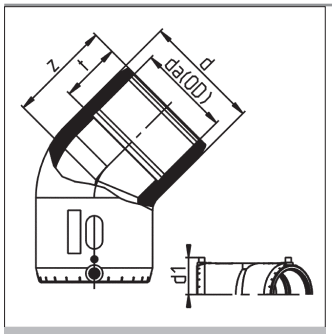

AHAM - 250 psi

KNIEEN 45°
COUDES A 45°
ELBOWS 45°

PE 100 RC, 250 PSI, 16 bar

SDR 11 / ISO S-5

da	t	z	d	d1	KG/ST/PC	€/ST/PC
63	62.0	82	82.5	58.5	0.33	**22.09**
75	69.5	94	97.0	66.0	0.33	**31.63**
90	71.0	113	115.0	74.0	0.50	**41.74**
110	72.0	124	140.0	82.5	0.89	**61.22**
125	86.0	124	161.0	92.0	1.43	**84.77**
160	89.0	164	200.0	112.0	1.83	**166.16**
180	99.0	172	224.0	119.0	3.56	**242.52**
200	106.5	178	249.0	131.0	4.89	**334.91**
225	113.0	190	279.0	146.0	6.00	**360.90**

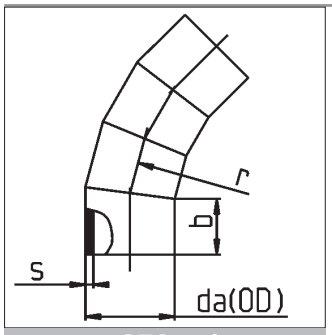

250 psi

KNIEEN 45° VERLENGD, 4 SEGMENTEN
COUDES A 45° ALLONGES, 4 ÉLÉMENTS
ELBOWS 45° ELONGATED, 4 SEGMENTS

PE 100 RC, 250 PSI, 16 bar

SDR 9/ ISO S-4

da	s	b	z
140	15.7	115	239
250	27.9	175	356
280	31.3	175	362
315	35.2	175	369
355	39.7	300	642
400	44.7	300	651
450	50.3	300	661
500	55.8	300	672

prijs op aanvraag / prix sur demande / prices on request

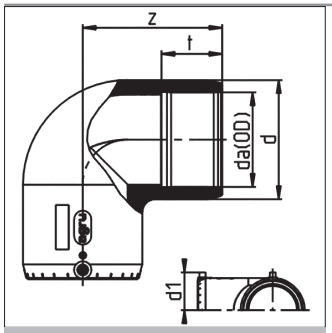

AGAM - 250 psi

KNIEEN 90°
COUDES A 90°
ELBOWS 90°

PE 100 RC, 250 PSI, 16 bar

SDR 11 / ISO S-5

da	t	z	d	d1	KG/ST/PC	€/ST/PC
63	63.0	100	83	60.0	0.39	**22.09**
75	70.0	115	97	66.0	0.60	**31.63**
90	70.5	147	114	73.0	1.09	**41.74**
110	71.5	164	140	82.5	1.80	**61.22**
125	84.0	164	161	91.0	2.40	**84.77**
160	87.0	222	200	109.0	4.70	**166.16**
180	98.5	230	224	118.0	6.25	**242.52**
200	107.0	250	248	130.0	8.00	**334.91**
225	113.0	274	279	144.0	10.80	**360.90**

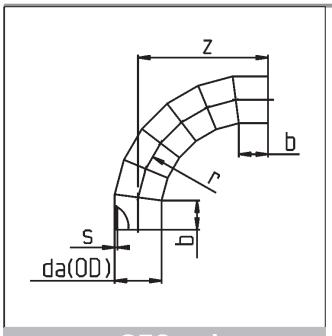

250 psi

KNIEEN 90°, 7 SEGMENTEN
COUDES A 90°, 7 ÉLÉMENTS
ELBOWS 90°, 7 SEGMENTS

Gesegmenteerd. Ook geschikt voor electromoflas.
Segmenté. Conviennent aussi pour l'electro-soudage.
Segmented. Also suitable for electric socket welding.

SDR 9 / ISO S-4

da	s	b	z
140	15.7	115	515
250	27.9	175	696
280	31.3	175	711
315	35.2	175	728
355	39.7	300	1302
400	44.7	300	1324
450	50.3	300	1349
500	55.8	300	1374

prijs op aanvraag / prix sur demande / prices on request

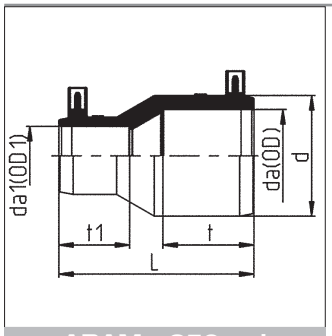

ARAM - 250 psi

REDUCTIES
REDUCTIONS
REDUCERS

PE 100 RC. 250 PSI. 16 bar

SDR 11 / ISO S-5

da/da1	L	d	d1	t	t1	KG/ST/PC	€/ST/PC
90/63	173	117	73.5	72	64	0.56	**29.71**
110/63	202	141	84.0	73	64	0.86	**48.42**
110/90	182	141	84.0	73	72	0.94	**48.42**
125/90	185	156	90.0	84	69	0.99	**59.48**
125/110	175	156	90.0	83	70	1.05	**59.48**
160/90	242	200	109.0	91	71	1.89	**84.49**
160/110	226	200	109.0	91	72	2.00	**86.61**
225/160	284	280	147.0	114	89	5.12	**196.57**

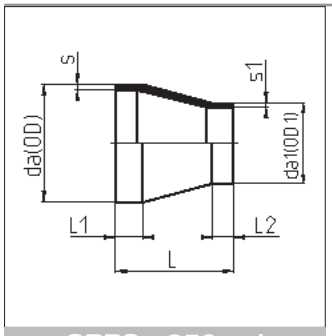

CRRS - 250 psi

REDUCTIES
REDUCTIONS
REDUCERS

Machined

SDR 9 / ISO S-4

da/da1	s	L	L1	L2	s1	KG/ST/PC
75/ 63	8.4	70	35	20	7.1	0.12
90/ 50	10.1	70	25	20	5.6	0.16
90/ 63	10.1	70	25	20	7.1	0.16
90/ 75	10.1	70	35	20	8.4	0.17
110/ 50	12.3	95	35	25	5.6	0.28
110/ 63	12.3	95	35	25	7.1	0.28
110/ 75	12.3	95	35	25	8.4	0.29
110/ 90	12.3	95	35	25	10.1	0.34
125/ 63	14.0	95	35	25	7.1	0.45
125/ 75	14.0	95	35	25	8.4	0.54
125/ 90	14.0	95	35	25	10.1	0.50
125/110	14.0	95	35	25	12.3	0.53
140/ 75	15.7	115	40	30	8.4	0.61
140/ 90	15.7	115	40	30	10.1	0.63
140/110	15.7	115	40	30	12.3	0.59
140/125	15.7	115	40	30	14.0	0.57
160/ 90	17.9	115	40	30	10.1	0.67
160/110	17.9	115	40	30	12.3	0.75
160/125	17.9	125	40	30	14.0	0.89
160/140	17.9	125	40	30	15.7	0.87
180/ 90	20.1	140	45	35	10.1	1.35
180/110	20.1	135	45	35	12.3	1.40
180/125	20.1	130	45	35	14.0	1.05
180/140	20.1	130	45	35	15.7	1.38
180/160	20.1	125	45	35	17.9	1.32
200/140	22.4	145	50	40	15.7	1.44
200/160	22.4	140	50	40	17.9	1.60
200/180	22.4	140	50	40	20.1	1.86
225/140	25.2	155	55	40	15.7	2.15
225/160	25.2	150	55	40	17.9	2.20
225/180	25.2	145	55	40	20.1	3.10
225/200	25.2	140	55	40	22.4	3.75

prijs op aanvraag / prix sur demande / prices on request

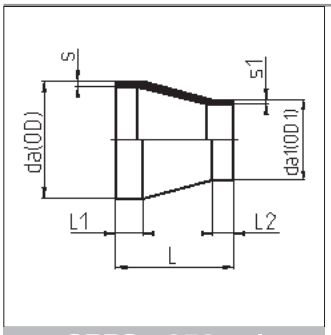

CRRS - 250 psi

REDUCTIES
REDUCTIONS
REDUCERS

Machined

SDR 9 / ISO S-4

da/da1	s	L	L1	L2	s1	KG/ST/PC
250/180	27.9	160	60	40	20.1	5.0
250/200	27.9	200	60	40	22.4	3.6
280/160	31.3	200	60	40	17.9	3.5
280/180	31.3	160	60	40	20.1	7.0
280/200	31.3	200	60	40	22.4	3.8
280/225	31.3	200	60	40	25.5	4.6
280/250	31.3	200	60	40	27.9	4.3
315/160	35.2	200	60	40	17.9	5.0
315/180	35.2	200	60	40	20.1	4.6
315/225	35.2	200	60	40	25.5	5.2
315/250	35.2	200	60	40	27.9	5.8
315/280	35.2	200	60	40	31.3	6.0
355/180	39.7	250	65	45	20.1	8.0
355/200	39.7	210	80	40	22.4	9.0
355/225	39.7	250	65	45	25.5	8.6
355/250	39.7	250	65	45	27.9	8.8
355/280	39.7	250	65	45	31.3	9.2
355/315	39.7	250	65	45	35.2	9.6
400/180	44.7	250	65	45	20.1	9.6
400/225	44.7	250	65	45	25.5	9.0
400/250	44.7	250	65	45	27.9	10.4
400/280	44.7	250	65	45	31.3	10.8
400/315	44.7	250	65	45	35.2	11.4
400/355	44.7	250	65	75	39.7	11.8
450/225	50.3	250	65	45	25.5	14.0
450/250	50.3	250	65	45	27.9	7.07
450/280	50.3	250	65	45	31.3	14.8
450/315	50.3	250	65	45	35.2	14.2
450/355	50.3	250	65	75	39.7	16.0
450/400	50.3	250	65	75	44.7	16.5
500/315	55.8	250	65	75	35.2	17.4
500/355	55.8	250	65	75	39.7	17.4
500/400	55.8	250	65	75	44.7	18.0
500/450	55.8	250	65	75	50.3	21.0

prijs op aanvraag / prix sur demande / prices on request

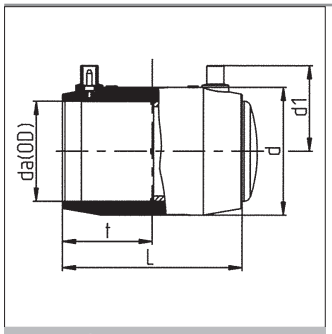

ACAM - 250 psi

EINDKAPPEN
BOUCHONS
END CAPS

PE 100 RC, 250 PSI, 16 bar

SDR 11 / ISO S-5

da	L	d	d1	t	KG/ST/PC	€/ST/PC
63	124.5	83.0	59.0	62.0	0.35	**19.19**
75	139.5	97.0	65.5	68.5	0.50	**30.16**
90	138.5	112.0	72.0	68.0	0.73	**42.88**
110	149.5	136.0	83.0	74.0	1.23	**54.99**
125	169.5	155.0	91.0	83.5	1.88	**67.60**
140	180.0	180.0	99.0	88.5	2.40	**90.07**
160	180.0	197.0	107.5	88.0	2.92	**94.96**
180	199.5	221.0	119.0	97.5	4.18	**129.72**
200	215.5	245.0	127.0	105.0	5.32	**147.36**
225	229.0	275.0	142.0	112.0	7.20	**187.59**
250	238.0	310.0	155.0	116.5	9.84	**279.52**
280	249.0	346.0	180.0	121.5	12.66	**386.63**
315	260.0	386.0	187.0	127.5	17.06	**487.11**

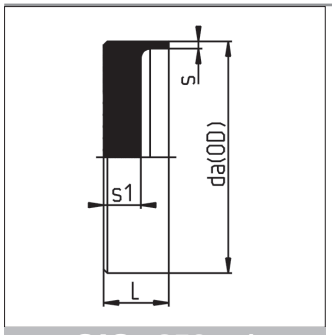

CAS - 250 psi

EINDKAP
BOUCHON
END CAPS

Machined

SDR 9 / ISO S-4

da	s	L	s1	KG/ST/PC
250	27.9	80	55	2.9
280	31.3	80	55	4.5
315	35.2	85	60	5.1
355	39.7	90	65	6.5
400	44.7	95	70	7.8
450	50.3	110	85	9.2
500	55.8	120	95	10.4

prijs op aanvraag / prix sur demande / prices on request

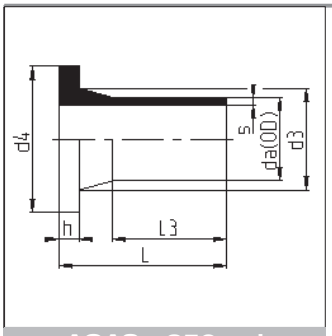

AQAS - 250 psi

VOORLASKRAGEN. VERLENGD
COLLETS ALLONGEES
STUBS ELONGATED

Gespoten . Ook geschikt voor electromoflas.
Injectées. Conviennent également pour l'électrosoudage.
Moulded. Also suitable for electro socket welding.

SDR 7.4/ uiteinden bewerkt naar SDR9 / conseils adaptés de SDR9 / ends machined to SDR9

da	s	L	L3	d3	d4	h	KG/ST/PC	€/ST/PC
63	7.1	118.0	78.0	75	102	14	0.259	**12.13**
75	8.4	128.0	86.0	89	122	16	0.400	**15.07**
90	10.1	140.0	95.0	105	138	17	0.590	**20.49**
110	12.3	140.0	97.0	125	158	18	0.843	**25.09**
125	14.0	180.0	121.5	132	158	25	1.260	**30.57**
160	17.9	181.5	119.5	175	212	25	2.140	**61.95**
200	22.4	180.5	121.5	232	268	32	3.580	**112.65**
225	25.2	182.5	129.0	235	268	32	3.800	**116.17**

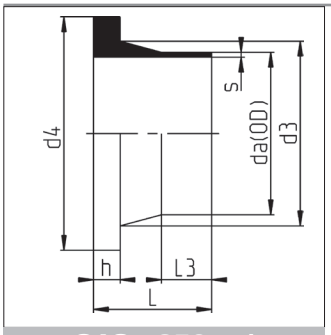

QAS - 250 psi

VOORLASKRAGEN
COLLETS
STUBS

Machined

SDR 9/ ISO S-4 / DIN

da	s	L	L3	d3	d4	h	KG/ST/PC
140	15.7	95	37	155	188	30	0.9
180	20.1	100	43	183	212	35	1.0
250	27.9	130	58	285	320	41	4.0
280	31.3	130	58	291	320	45	4.2
315	35.2	136	65	335	370	47	5.8
355	39.7	150	70	373	430	52	8.6
400	44.7	155	70	427	482	58	11.4
450	50.3	166	70	514	585	69	19.0
500	55.8	175	70	530	585	71	18.5

prijs op aanvraag / prix sur demande / prices on request
SDR 9/ ISO S-4 / ANSI : op aanvraag / sur demande / on request

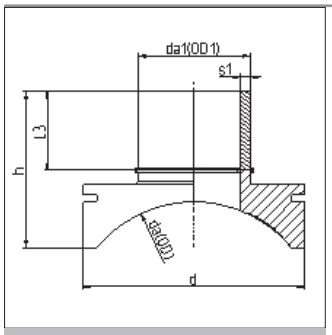

289 - 250 psi

AANBOORZADEL. TYPE TOPLOAD - 289
SELLE DE SUPPORT. TYPE TOPLOAD - 289
SPIGOT SADDLE. TYPE TOPLOAD - 289

SDR 9/ ISO S-4 / DIN

da/da1	h	d	s1	L3	KG/ST/PC
355/ 90	176	200	10.1	94	3.42
355/110	194	250	12.3	97	3.42
355/125	209	280	14.0	102	3.42
400/ 90	173	200	10.1	94	3.42
400/110	189	250	12.3	97	3.42
400/125	204	280	14.0	102	3.42
450/ 90	171	200	10.1	94	3.42
450/110	186	250	12.3	97	3.42
450/125	199	280	14.0	102	3.42
500/ 90	168	200	10.1	94	3.42
500/110	182	250	12.3	97	3.42
500/125	195	280	14.0	102	3.42

prijs op aanvraag / prix sur demande / prices on request

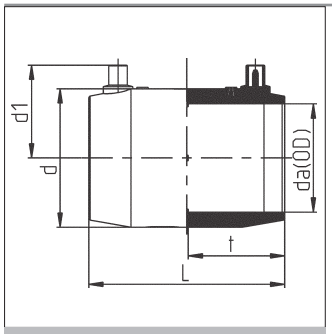

AMAM - 250 psi

ELECTROLASMOFFEN
MANCHONS ELECTRO-SOUDAGE
ELECTRO WELDING SLEEVES

Gespoten
Injectés
Moulded

PE 100 RC , water/eau : 25 bar

SDR 11 / ISO S-5

da	t	L	d	d1	SDR	KG/ST/PC	€/ST/PC
63	62.0	124.5	83.0	59.0	17-7.4	0.249	**7.99**
75	68.5	139.5	97.0	65.5	17-7.4	0.350	**11.40**
90	68.0	138.5	112.0	72.0	17-7.4	0.450	**15.17**
110	73.0	149.0	136.0	83.0	17-7.4	0.712	**18.24**
125	83.5	169.5	155.0	91.0	17-7.4	0.980	**25.65**
140	88.5	180.0	173.0	99.0	17-7.4	1.370	**30.09**
160	88.0	180.0	197.0	109.0	17-7.4	1.710	**35.35**
180	97.5	199.5	221.0	119.0	26-7.4	2.460	**50.74**
200	105.0	215.5	245.0	127.0	17-7.4	3.140	**59.91**
225	112.0	229.0	275.0	142.0	17-7.4	4.200	**77.18**
250	116.5	238.0	310.0	155.0	26-7.4	4.820	**113.73**
280	121.5	249.0	346.0	180.0	26-7.4	7.700	**154.11**
315	127.5	260.0	386.0	180.5	26-7.4	8.000	**185.36**

PE 100 RC , water/eau : 16 bar

SDR 11 / ISO S-5

da	t	L	d	d1	SDR	KG/ST/PC	€/ST/PC
355	136.5	280	445	225.0	26-11	14.75	**339.43**
400	146.5	300	499	254.0	26-11	19.80	**425.62**
450	166.0	338	552	260.0	17-11	20.60	**538.32**
500	178.5	358	604	289.0	17-11	26.00	**651.34**

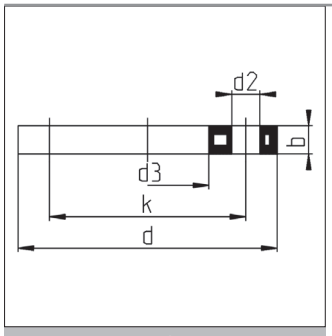

PP-GFK

OVERSCHUIFFLENZEN ZWART MET STALEN KERN
BRIDES LIBRES NOIR AVEC NOYAU EN ACIER
BACKING RINGS BLACK WITH STEEL INSERT

Volgens EN 1092-1 PN10, geboord PN10/16 da 63-180, geboord PN10 da 200-500.
Materiaal: PP-R + 30% glasvezel.

Selon EN 1092-1 PN10; forrage PN10/16 da 63-180, forrage PN10 da 200-500.
Matériau: PP-R + 30% de fibres de verre.

According to EN 1092-1 PN10, drilled PN10/16 da 63-180, drilled PN10 da 200-500.
Material: PP-R +30% glassfibre.

BUIS TUYAU PIPE da	d	d2	d3	b	k	BOUTEN BOULONS BOLTS	KG/ST/PC	€/ST/PC
63	165	18.0	78	18	125	4 x M16	0.79	**18.56**
75	186	18.0	92	18	145	4 x M16	1.17	**20.61**
90	202	18.0	108	20	160	8 x M16	1.18	**24.51**
90	202	18.0	110	20	160	8 x M16	1.14	**24.51**
110	222	18.0	128	20	180	8 x M16	1.58	**29.10**
110	220	18.0	133	20	180	8 x M16	1.41	**29.10**
125	220	18.0	135	20	180	8 x M16	1.40	**29.10**
125	220	18.0	149	20	180	8 x M16	1.20	**29.10**
140	250	18.0	158	24	210	8 x M16	1.95	**44.77**
140	250	18.0	167	24	210	8 x M16	1.79	**44.77**
160	285	22.0	178	23	240	8 x M20	2.36	**50.25**
160	285	22.0	190	23	240	8 x M20	2.29	**50.25**
180	286	22.0	190	24	240	8 x M20	2.36	**51.35**
200	340	22.0	235	25	295	8 x M20	3.14	**73.24**
225	340	22.0	238	25	295	8 x M20	3.07	**73.24**
225	340	22.0	250	25	295	8 x M20	2.78	**73.24**
250	409	22.0	288	30	350	12 x M20	6.53	**116.83**
280	409	22.0	294	30	350	12 x M20	6.16	**116.83**
315	463	23.0	338	34	400	12 x M20	9.76	**146.85**
355	515	22.5	376	42	460	16 x M20	14.80	**309.48**
400	574	26.0	430	46	515	16 x M24	17.74	**350.10**
450	678	26.0	517	45	620	20 x M24	24.96	**467.51**
500	678	26.0	533	45	620	20 x M24	24.38	**467.51**
560	789	30.0	618	50	725	20 x M27	33.40	**634.13**
630	789	30.0	645	50	725	20 x M27	32.62	**634.13**

da 63 - 180	PN10/16 geboord / foré / drilled	MOP: 16 bar
da 200 - 500	PN10 geboord / foré / drilled	MOP: 16 bar
da 560 - 630	PN10 geboord / foré / drilled	MOP: 10 bar

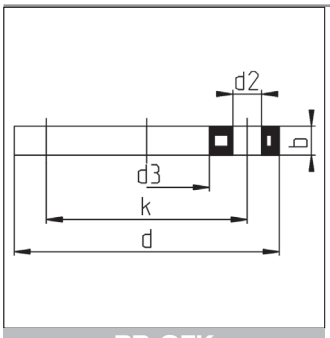

PP-GFK

OVERSCHUIFFLENZEN ZWART MET STALEN KERN
BRIDES LIBRES NOIR AVEC NOYAU EN ACIER
BACKING RINGS BLACK WITH STEEL INSERT

Volgens DIN 16.962/16.963, geboord PN16 / Selon DIN 16.962/16.963; forrage PN16 /
According to: DIN 16.962/16.963, drilled PN16

BUIS TUYAU PIPE da	d	d2	d3	b	k	BOUTEN BOULONS BOLTS	KG/ST/PC	€/ST/PC
200	340	22	235	24	295	12 x M20	3.86	**120.67**
225	340	22	238	24	295	12 x M20	3.85	**120.67**
250	418	26	288	30	355	12 x M24	7.00	**176.80**
280	419	26	294	30	355	12 x M24	6.92	**176.80**
315	478	26	338	34	410	12 x M24	10.52	**224.13**
355	530	26	376	42	470	16 x M24	16.70	**407.93**
400	599	30	430	46	525	16 x M27	20.85	**450.84**

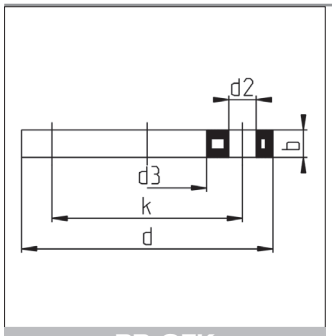

PP-GFK

OVERSCHUIFFLENZEN MET STALEN KERN
BRIDES LIBRES AVEC NOYAU EN ACIER
BACKING FLANGES WITH STEEL INSERT

Gespoten, met stalen kern volgens ANSI norm (ASME B 16.5 class. 150)
Materiaal: PP-R + 30% glasvezel.
Kleur: grijs (alternatief: zwart)

Injectées avec noyau en acier selon norme ANSI (ASME B 16.5 class. 150)
Matériau: PP-R + 30% de fibres de verre
Couleur: gris (noir en option)

Moulded with steel insert according to ANSI (ASME B 16.5 class. 150)
Material: PP-R + 30% glass fibre
Colour: grey (alternative: black)

	BUIS TUYAU PIPE Da	d	k	d3	b	d2	n	KG/ST/PC	€/ST/PC
2”	**63**	162	120.65	78	18	20	4	0.81	**32.88**
2 1/2”	**75**	184	139.70	92	18	20	4	1.07	**40.62**
3”	**90**	194	152.40	111	18	20	4	1.03	**47.61**
4”	**110**	229	190.50	133	18	20	8	1.54	**62.16**
6”	**160**	283	241.30	178	24	22	8	2.40	**117.31**
8”	**200**	345	298.45	236	24	22	8	3.39	**169.75**
10”	**250**	412	361.95	288	26	25	12	6.20	**218.57**
12”	**315**	487	431.80	338	32	25	12	13.04	**337.17**

MOP: 16 bar
n = aantal gaten / nombre de trous / number of holes

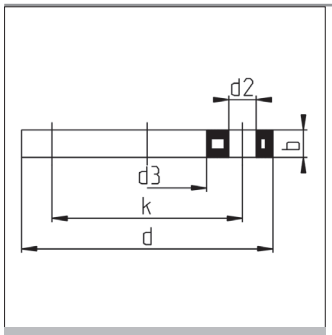

STALEN OVERSCHUIFFLENZEN
BRIDES LIBRES EN ACIER
STEEL BACKING FLANGES

Volgens ANSI norm (ASME B 16.5 class. 150)
Materiaal: staal, gegalvaniseerd.

Selon norme ANSI (ASME B 16.5 class. 150)
Matériau: acier galvanisé

According to ANSI (ASME B 16.5 class. 150)
Material: steel galvanised

	BUIS TUYAU PIPE Da	d	k	DN	b	d2	BOUTEN BOULONS BOLTS
14”	**355**	535	476.25	350	33.4	29	12 x M30
16”	**400**	595	539.75	400	35.0	29	16 x M32
18”	**450**	635	577.85	400	38.1	32	16 x M32
20”	**500**	700	635.00	500	41.3	32	20 x M32
22”	**560**	750	692.15		30.2	35	20 x M32
24”	**560**	815	749.30		46.1	35	20 x M32

prijs op aanvraag / prix sur demande / prices on request

MOP: 20 bar

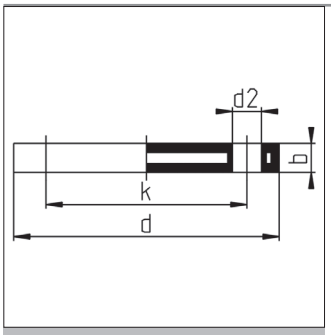

PP-GFK

BLINDFLENZEN MET STALEN KERN
BRIDES PLEINES AVEC NOYAU EN ACIER
BACKING FLANGES WITH STEEL INSERT

Volgens EN 1092-1 PN10
Geboord PN10/16 da 63-180, geboord PN10 da 200-400.
Materiaal: PP-R + 30% glasvezel.

Selon EN 1092-1 PN10; forrage PN10/16 da 63-180, forrage PN10 da 200-400.
Matériau: PP-R + 30% de fibres de verre.

According to EN 1092-1 PN10, drilled PN10/16 da 63-180, drilled PN10 da 200-400.
Material: PP-R +30% glassfibre.

BUIS TUYAU PIPE da	d	d2	b	k	DN	BOUTEN BOULONS BOLTS	KG/ST/PC	€/ST/PC
63	165.0	18	17	125	50	4 x M16	1.15	**61.21**
75	185.5	18	19	145	65	4 x M16	1.64	**71.67**
90	202.0	18	20	160	80	8 x M16	1.96	**78.89**
110/125	220.0	18	20	180	100	8 x M16	2.36	**107.78**
140	250.0	18	24.5	210	125	8 x M16	3.92	**132.35**
160/180	285.0	22	23.0	240	150	8 x M20	5.06	**166.99**
200/225	340.0	22	25	295	200	8 x M20	6.50	**185.49**
250/280	409.0	22	30	350	250	12 x M20	15.40	**242.39**
315	463.0	22	34	400	300	12 x M20	25.00	**353.86**
355	515.0	22	42	460	350	16 x M20	39.66	**692.23**
400	574.0	27	46	515	400	16 x M24	50.44	**790.76**

da 63 - 180	PN10/16 geboord / foré / drilled	MOP: 16 bar
da 200 - 225	PN10 geboord / foré / drilled	MOP: 16 bar
da 250 - 400	PN10 geboord / foré / drilled	MOP: 10 bar

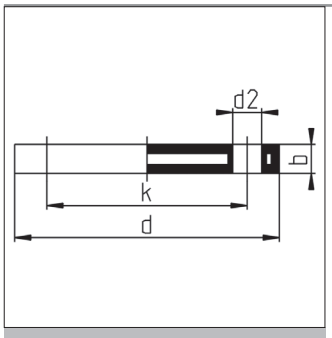

STALEN BLINDFLENZEN
BRIDES PLEINES EN ACIER
STEEL BACKING FLANGES

Volgens EN 1092-1 PN10
Materiaal: staal, gegalvaniseerd

Selon EN 1092-1 PN10
Matériau: acier galvanisé

According to EN 1092-1 PN10
Material: steel galvanised

BUIS TUYAU PIPE Da	d	k	b	d2	BOUTEN BOULONS BOLTS
450/500	670	620	44	26	20 x M24

prijs op aanvraag / prix sur demande / prices on request

MOP: 16 bar

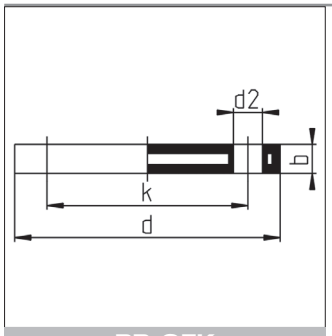

PP-GFK

BLINDFLENZEN MET STALEN KERN
BRIDES PLEINES AVEC NOYAU EN ACIER
BACKING FLANGES WITH STEEL INSERT

Gespoten, met stalen kern volgens ANSI norm (ASME B 16.5 class. 150)
Materiaal: PP-R + 30% glasvezel.
Kleur: grijs (alternatief: zwart)

Injectées avec noyau en acier selon norme ANSI (ASME B 16.5 class. 150)
Matériau: PP-R + 30% de fibres de verre
Couleur: gris (noir en option)

Moulded with steel insert according to ANSI (ASME B 16.5 class. 150)
Material: PP-R + 30% glass fibre
Colour: grey (alternative: black)

	BUIS TUYAU PIPE Da	d	k	DN	d3	b	d2	n	KG ST/PC	€ ST/PC
2”	**63**	162	120.7	50	78	18	20	4	1.22	**87.95**
2 1/2”	**75**	184	139.7	65	92	18	20	4	1.54	**100.56**
3”	**90**	194	152.4	80	111	18	20	4	1.84	**122.30**
4”	**110**	229	190.5	100	133	18	20	8	2.95	**154.91**
6”	**160**	283	241.3	150	178	24	22	8	5.10	**259.03**
8”	**200**	345	298.5	200	236	24	22	8	7.92	**266.79**
10”	**250**	412	362.0	250	288	27	25	12	15.15	**348.27**
12”	**315**	487	431.8	300	338	33	25	12	28.50	**508.97**

MOP: 16 bar
n = aantal gaten / nombre de trous / number of holes

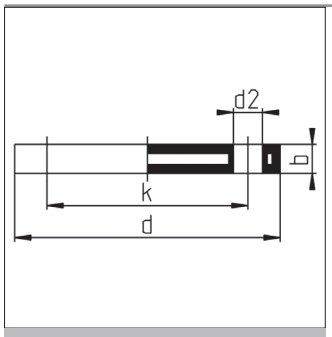

STALEN BLINDFLENZEN
BRIDES PLEINES EN ACIER
STEEL BACKING FLANGES

Volgens ANSI norm (ASME B 16.5 class. 150)
Materiaal: staal, gegalvaniseerd.

Selon norme ANSI (ASME B 16.5 class. 150)
Matériau: acier galvanisé

According to ANSI (ASME B 16.5 class. 150)
Material: steel galvanised

	BUIS TUYAU PIPE Da	d	k	b	d2	n
14”	**355**	535	476.5	33.4	32	12
16”	**400**	595	539.8	35.0	35	16
18”	**450**	635	577.9	38.1	35	16
20”	**500**	700	635.0	41.3	35	20

prijs op aanvraag / prix sur demande / prices on request

MOP: 16 bar
n = aantal gaten / nombre de trous / number of holes